TRUE REFRIGERATION INTERNATIONAL
UK Tel +44(0)1709 88080 • Germany Tel +49(0)7622 68830
Australia Tel +61 2 9618 9999 • www.truemfg.com

Model:

TDR52-RISZ1-L-S-SG-2

05/21

True Draft Refrigerator:
Reach-In Single Zone Refrigerator

FEATURES

- R290 Hydrocarbon refrigerant.
- Temperatures of 33°F to 38°F (.5°C to 3.3°C)
- Exterior: Stainless steel
- Interior: Stainless steel
- RCU Technology
- White LED interior lighting
- NSF/ANSI standard 7 compliant for the storage and/or display of packaged or bottled product
- Three (3) interior access ports
- Field reversible doors
- Zero clearance / Front air intake / front air discharge
- Electronic temperature control with exterior digital display
- 381mm surface mounted drip tray trough
- 77mm diameter insulated column with single faucet and 2-way manifold

OPTIONS

- TruLumina® 14-Color LED lighting
- Castors: 23 mm rollers, 51mm, 77mm, 102mm, 127mm castors
- 153mm legs
- 153mm seismic legs
- Optional draft towers available (contact factory)
- Alternative temperature zones available (contact factory)
- Right side compressor

PLAN VIEW

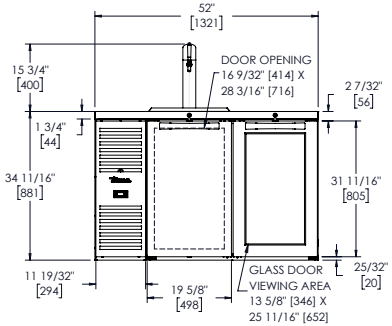

FRONT VIEW

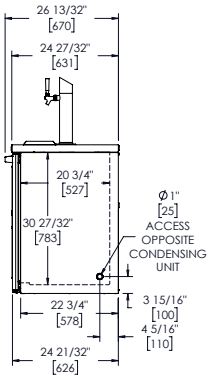

SIDE VIEW

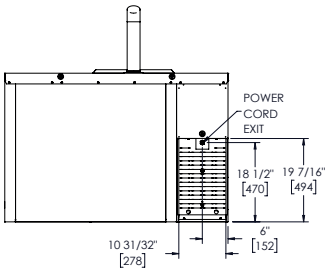

BACK VIEW

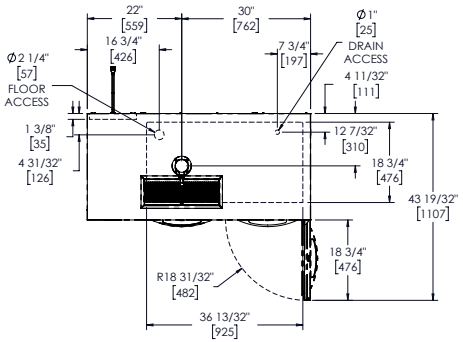

TOP VIEW

ROUGH-IN DATA

Specifications subject to change without notice. Chart dimensions rounded up to the nearest whole millimeter

Model	Doors	Shelves	Barrel Capacity					Cabinet Dimensions (mm)			220-240V/50-60Hz		Crated Weight (kg)
			Home Brew Barrels	⅙ Barrels	Slim ¼ Barrels	¼ Barrels	½ Barrels	W	D†	H*	HP	Amps	
TDR52-RISZ1-L-S-SG-2	2	3	4	4	2	1	1	1321	631	881	⅓	1.3	—

† Depth does not include 35 mm for door handles. * Height does not include 7 mm for leg levelers
* Height does not include 400mm for draft tower.